Arduino without Arduino

Daniel Rojas
@AFRA Berlin

http://piratepad.net/F8YeTrtc0f
http://danielrojas.net

Objective

- ➔ Still use Arduino in your project, but…
  …keep your software, without the entire board
- ➔ Save space + weight
  (ATmega chip < Arduino board)
- ➔ Save money
  (less components, free chip samples)
- ➔ Save your Arduino board for where it's really needed
  (USB, power regulator, pin headers, …)

What is a bootloader?

- Before: Programming ATmegas using ISP
  - Complicated, “scary”, needs special programmer
  - Setting wrong fuses can make chip unusable
- Arduino: Simple upload via serial port
  - Simple, standard protocol, safe thanks to:
- **Bootloader**: Tiny program that helps in uploading the actual program to the chip

Main steps

- Build an In-System Programmer (ISP) with Arduino
- Configure and burn the Arduino bootloader onto a brand new chip
- Use the standalone chip (almost) like a regular Arduino

Build an ISP

- Upload the ArduinoISP sketch
  - File
  - Examples
  - ArduinoISP

  - Upload

- Alternative: Adafruit Arduino ISP
  https://raw.github.com/adafruit/ArduinoISP/master/ArduinoISP.ino

Prepare the new chip

- Connecting the slave
  - VCC Pin 7 +5V
  - GND Pins 8, 22
  - RST Pin 1 slave reset
  - MOSI Pin 17 master out; slave in
  - MISO Pin 18 master in; slave out
  - SCK Pin 19 serial clock
- Connecting the master
  - Refer to comments in ArduinoISP sketch
  - Add 10 uF capacitor between master reset and GND for uploading

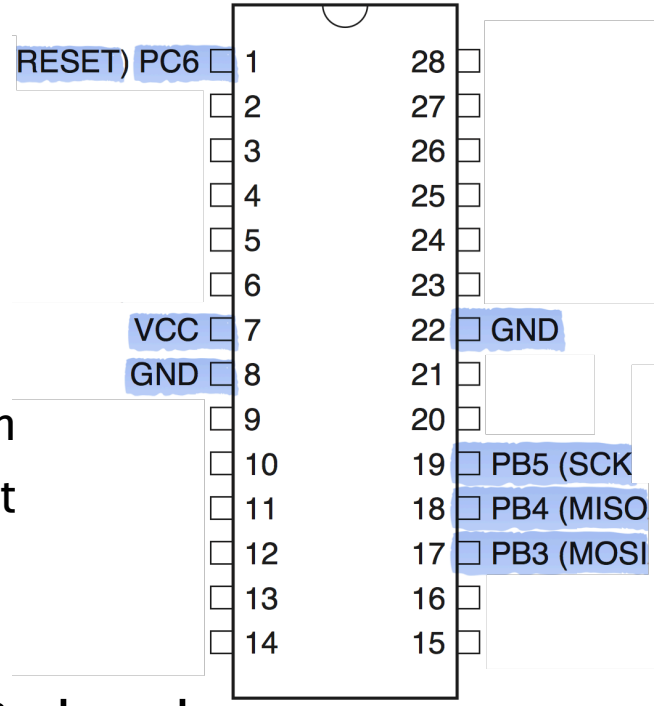

Burn the bootloader

- Creating a new Arduino Uno:
  - Tools
    - Board
    - Arduino Uno

    - Programmer
    - Arduino as ISP

    - Burn bootloader
- Done!

Forget the crystal oscillator

- Normally: 16 MHz external crystal
- Often enough: 8 or 1 MHz internal oscillator

- New chip types and variants can be added to Arduino IDE in version 1.6.4

- Change this and other settings!

Adding custom boards

- Where to find new board config files?
  - Preferences
  - Additional board manager URLs
- Add bare ATmega328p and ATtiny's
  https://raw.githubusercontent.com/damellis/attiny/ide-1.6.x-boards-manager/package_damellis_attiny_index.json,
  https://raw.githubusercontent.com/carlosefr/atmega/master/package_carlosefr_atmega_index.json
- Choose the new board config
  - Tools
  - Board / Processor / Clock / …

Burn the bootloader (custom)

- Creating barebones ATmega's / ATtiny's
  - Tools
  - Board
  - ATmega / ATtiny

  - Programmer
  - Arduino as ISP

  - Processor / Clock / …

  - Burn bootloader

- CAUTION: Currently does NOT include Arduino bootloader

Talk to the new chip (Arduino PCB)

- Unplug everything
- Remove the ATmega from the Arduino PCB
  - We will use the PCB's USB/Serial converter only
- Connect the new chip to the Arduino PCB
  - 5V Pin 7
  - GND Pins 8,22
  - RESET Pin 1
  - Rx Pin 2 PCB's Rx to chip's Rx!
  - Tx Pin 3 (no crossover!)

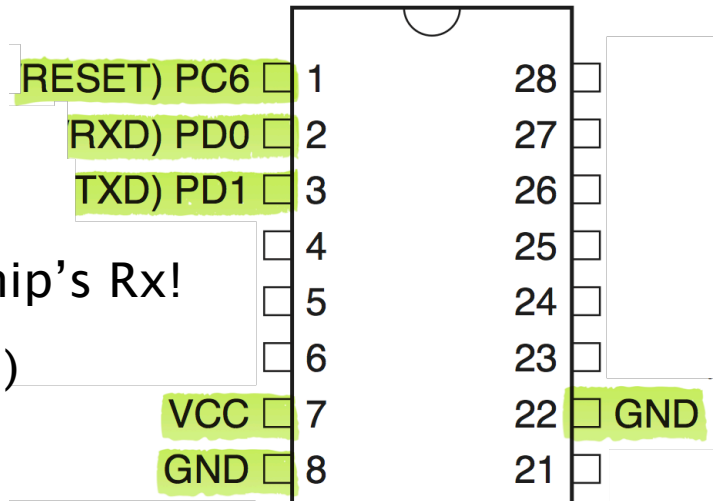

Talk to the new chip (USB/Serial adaptor)

- Unplug everything
- Connect USB/Serial adaptor to new chip

5V	Pin 7	
GND	Pins 8,22	
DTR	Pin 1	RESET
Tx	Pin 2	Adaptor's Tx to chip's Rx!
Rx	Pin 3	(yes crossover!)

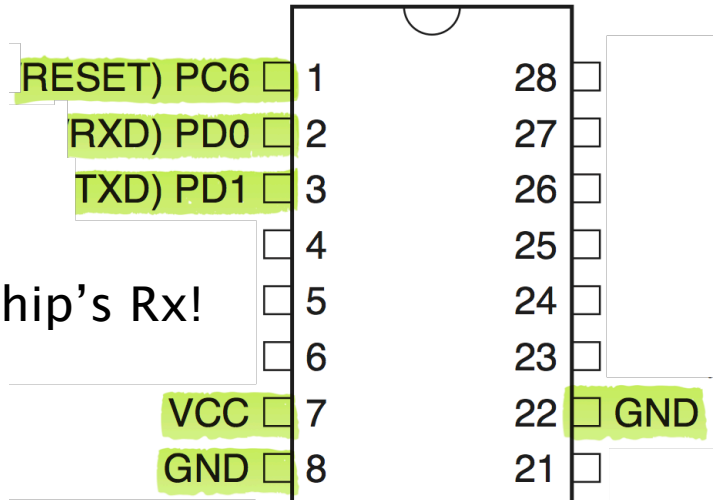

Upload a sketch

- Use a simple test
  - File
  - Examples
  - 01.Basics
  - Blink
- Connect LED+resistor to D13 (chip pin 19)
- Upload
  - Alternative: Upload using programmer
    + No need to rewire!
    - But: No direct serial comm
- Rejoice!

Matching the pins

➔ https://www.adafruit.com/products/601

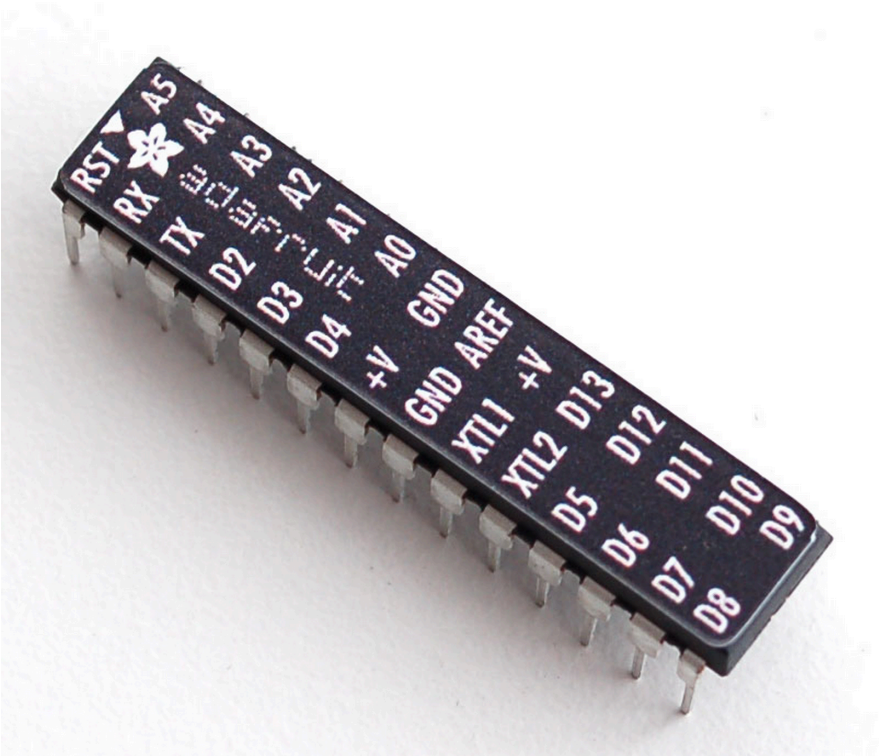

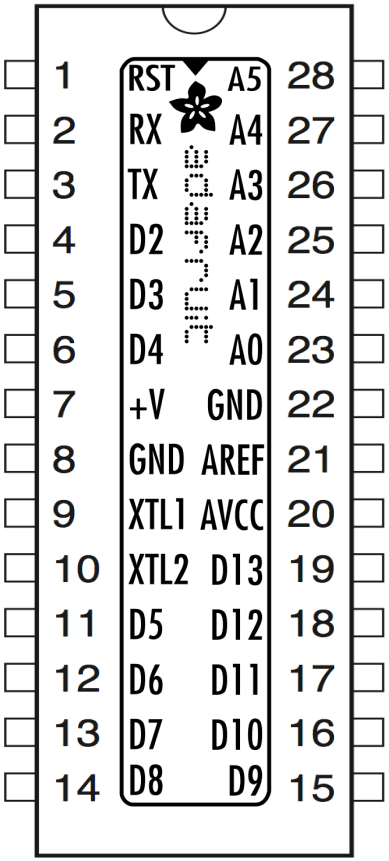

Additional notes

- Don't forget to re-set chip type when programming normal Arduino (Tools → Board → …)
- How to test for presence of Arduino Bootloader?
  - LED on pin D13 flashes after reset? Has the bootloader.
- Accidentaly selected external oscillator?
  - It will require the oscillator to work, even for a re-burn
  - Solution: Plug into Arduino PCB with crystal
- ATmega328**P**-PU ≠ ATmega328-PU…
  - ~~For ATmega328 burning: change boards.txt, avrdude.conf~~

Additional notes

- Feeling brave?
  - Configure your own chip variants
  - Play with fuses!
    - http://www.engbedded.com/fusecalc
  - Common uses for fuses:
    - Clock source and speed
    - Brownout detection
    - Reset disable (one more GPIO, no more reflashing*)
  - config is inside Arduino's /packages/ folder!

- Datasheets are your friends!
  - Especially for pinouts…

Useful diagrams

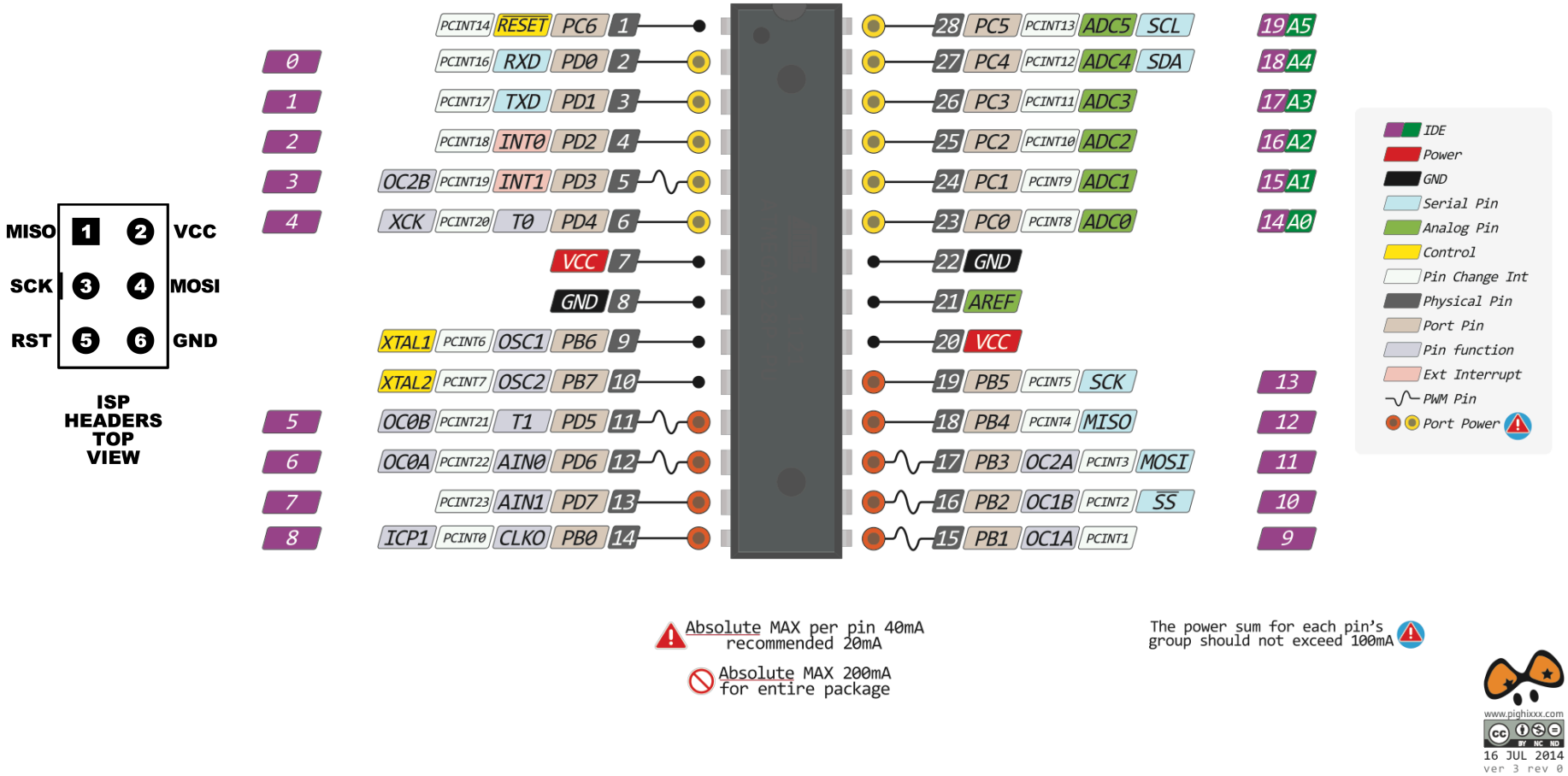

http://www.pighixxx.com/test/portfolio-items/atmega328/?portfolioID=337

ARDUINO OPEN-SOURCE COMMUNITY

ARDUINO
OPEN-SOURCE
COMMUNITY

Thank you for your attention

Happy tinkering!